THE INSTITUTE OF EDUCATION

Chemistry

Tara Lyons

Higher Level

2020-21

Chromatography & Instrumentation in Organic Chemistry

Atomic Theory- Ionic Bonding

Denis has been an English

Unauthorised publication, distribution or reproduction of these notes is prohibited.

CHROMATOGRAPHY

This is a technique that is used to **separate** different substances in a **mixture.** You can also then identify and measure the amount of these substances present in the mixture using other instruments.

THE PRINCIPLE

The basic principle is that a mobile phase (a solvent), will carry a dissolved mixture through a stationary phase (paper or thin layer of aluminium oxide). The separation occurs, as some of the components of the mixture tend to be held (attracted to) by the stationary phase and move more slowly than those that mix well with the mobile phase.

EXPERIMENT – TO SEPARATE A MIXTURE OF INDICATORS (or INKS) USING CHROMATOGRAPHY.

1. USING PAPER CHROMATOGRAPHY

Theory behind the experiment – a small amount of the indicator mixture is placed on a strip of filter paper (or chromatography paper). This paper is placed so that it just touches a suitable solvent. The paper absorbs the solvent and the solvent moves up through the paper and the indicator mixture dissolves in the solvent. The degree to which the components of the mixture dissolves in the solvent differs. The components that do not dissolve easily in the solvent will come out of the solution and appear on the paper as a spot. Those that do dissolve well will be carried up the paper further and will eventually appear as spots on the paper at different intervals. In this way the components will be separated.

Results – these are obtained by recording the R_f values which equals

$$R_f = \frac{Dis\tan ce \text{ travelled by the component}}{Dis\tan ce \text{ travelled by the solvent front}}$$

These values may be used to tentatively identify the components in a mixture of indicators.

Apparatus – chromatography paper, gas jar, ruler, pencil, sellotape, glass rod, hair dryer, capillary tubes.

Materials – a mixture of indicators, water/ethanol/ammonia solution (solvent).

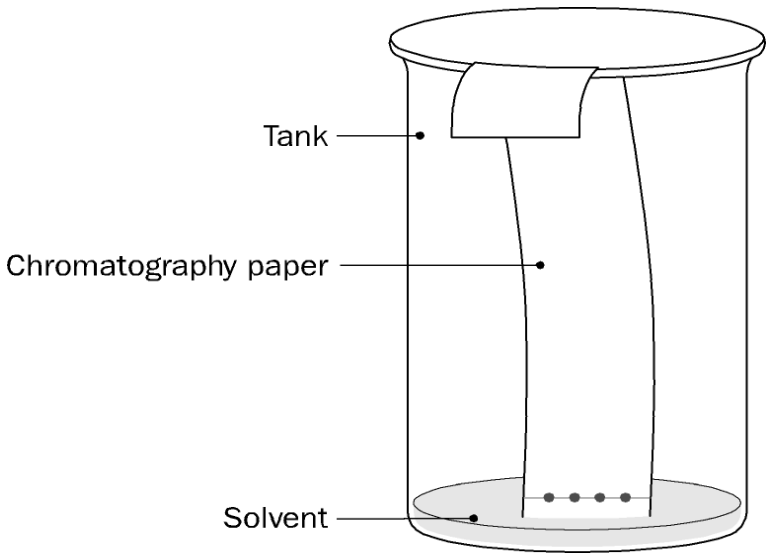

Method –

1. The solvent was added to the bottom of the gas jar to a depth of about 1 cm. This was allowed to stand for a while to allow the tank to become saturated with the solvent's vapour.
2. On the chromatography paper **a line** was made near the **top** of the paper with a pencil and **another line** near the **bottom**.
3. A small spot of the mixture of indicators was placed on the line at the bottom of the paper using the capillary tube. This was dried with a hair dryer to prevent the spot from spreading. This procedure was repeated several more times to build up **a small concentrated spot of the mixture.**
4. The paper with the 'spot side down' was then placed in the gas jar so that the end of the paper was just touching the solvent. **Do not immerse the spot**. Attach the top of the paper to a glass rod using the sellotape.
5. The chromatogram was allowed to run until the solvent reached the line at the top of the paper.
6. The paper was removed and dried.

Results –

Distance travelled by the solvent front –
Distance travelled by the fastest moving component of the mixture –
$R_f =$

Distance travelled by the second fastest moving component of the mixture –
$R_f =$

Distance travelled by the third fastest moving component of the mixture –
$R_f =$
Etc……

Questions on the experiment –

1. Why is the gas jar not used for a time after the solvent has been added?
2. Why are two lines drawn on the paper?
3. When is it possible to separate two components of a mixture using paper chromatography?
4. When two substances are found to have two different R_f values in an experiment carried out under the same conditions, what does this mean?

Answers –

1. To allow time for the tank to become saturated with solvent vapour.
2. One line is needed to indicate where the samples start from, and the other to indicate the distance travelled by the solvent front, which enables the R_f values to be calculated.
3. When one of the components is attracted to significantly different extents by the stationary phase and/or the mobile phase.
4. The two substances are not identical.

2. USING THIN LAYER CHROMATOGRAPHY (TLC)

Theory behind the experiment – TLC plates have the stationary phase as a layer of aluminium oxide or silica gel spread thinly and evenly over aluminium foil. The foil provides support for the stationary phase i.e. the aluminium oxide. It is more efficient than paper chromatography as the particles in the stationary phase are smaller and this gives a better and more accurate separation of the components in the mixture. Otherwise the principle is the same, as we will see below.

Apparatus – TLC plate, pencil, ruler, capillary tube, filter paper, hair dryer.

Materials – mixture of indicators, industrial methylated spirits.

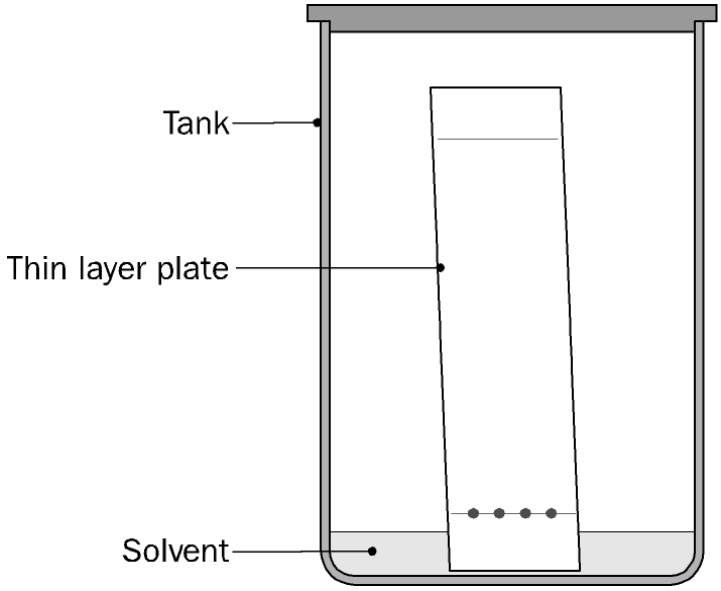

Method –

1. A piece of filter paper was cut to fit around the walls of the gas jar (speeds up saturation of the jar with solvent).
2. Industrial methylated spirits was added to allow it to saturate the paper and give a depth of about 1 cm at the bottom.
3. The jar was covered and left to stand for a while.
4. A line was drawn at the top and bottom of the plate.
5. A small drop of the mixture was placed on the line at the bottom of the plate and was dried using a hair dryer.
6. The plate was stood in the jar making sure that the spot was above the solvent level.
7. The chromatogram was allowed to run until the solvent had risen to the pencil line at the top of the plate.
8. The plate was removed and allowed to dry.

Results –
Distance travelled by the solvent front –
Distance travelled by the fastest moving component of the mixture –
$R_f =$

Distance travelled by the second fastest moving component of the mixture –
$R_f =$

Distance travelled by the third fastest moving component of the mixture –
$R_f =$
Etc……..

Questions on the experiment –
1. Why is filter paper placed around the walls of the gas jar?
2. Why are two lines drawn on the TLC plate?
3. When is it possible to separate components of a mixture using thin layer chromatography?
4. When two substances are found to have identical R_f values, what does this mean?

Answers –
1. To speed up saturation of the tank with solvent vapour.
2. One line is needed to indicate where the samples start from, and the other to indicate the distance travelled by the solvent front, which enables the R_f values to be calculated.
3. When one of the components is attracted to significantly different extents by the stationary phase and/or the mobile phase.
4. The two substances may be the same, but further evidence is necessary to establish this conclusively.

Social and applied aspects of TLC
1. Used in the pharmaceutical industry to determine purity of drugs.
2. Used in forensic science to separate colours in dyes extracted from fibres.

3. USING COLUMN CHROMATOGRAPHY

Theory behind the experiment – the stationary phase, silica gel, is placed in a long glass tube (the column). Glass wool at the end prevents the material from running out. An appropriate solvent is used when mixing the stationary phase i.e.ethanol if separating organic substances and water if separating polar substances. The silica gel is kept saturated with the solvent to prevent it from drying out. The mixture to be separated is dissolved in a solvent and is added to the top of the column. More solvent is added so that the level is above the stationary phase. The mixture of the components to be separated are adsorbed to a different extent along the column.
Passing the solvent through the column is called **'elution'**. The solvent is the **eluent.**

Apparatus – syringe, adapter, extraction column.

Materials – mixture of indicators, methanol (solvent), water.

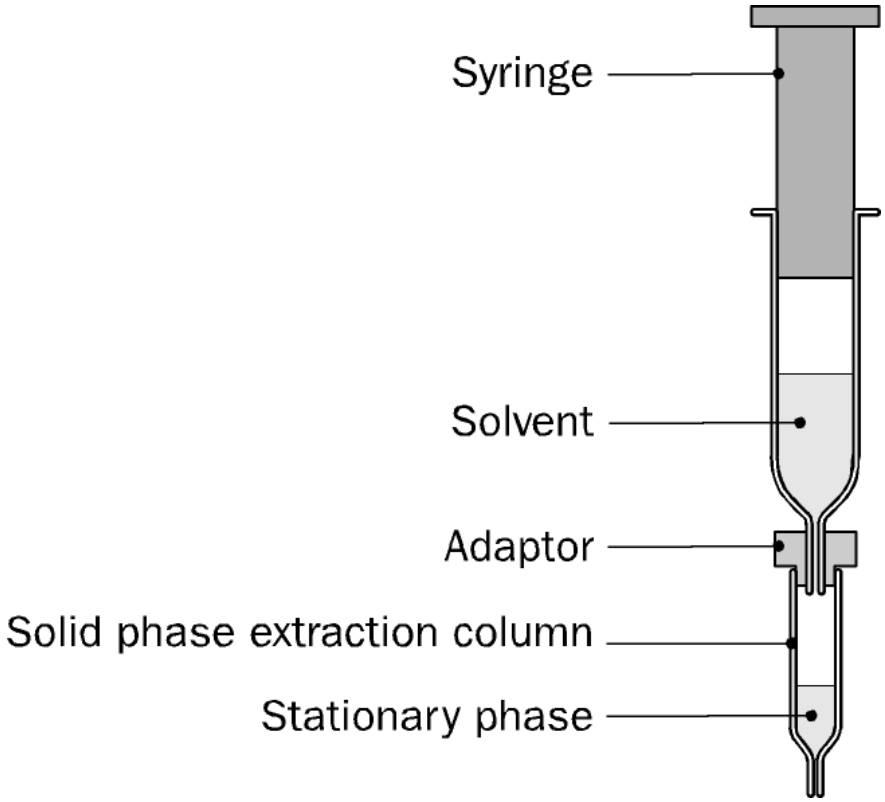

Method –

1. The solid phase extraction column was flushed through with methanol using the plunger of the syringe.
2. The column was then flushed through with water.
3. A sample of the mixture of indicators was placed on top of the column to a depth of 1 mm.
4. The methanol solution was added to the syringe.
5. This was forced through the column using the syringe.
6. The mixture flows down through the column.
7. Separations occurs as the mixture appears as bands of different colours.

8. The different components of the mixture were collected in separate beakers.

Questions on the experiment –

1. When is it possible to separate components of a mixture using column chromatography?
2. What is the purpose of the syringe in the experiment?
3. Why is an adapter necessary?
4. Why is it necessary to flush the column with methanol and then water before using it?

Answers –

1. When one of the components is attracted to significantly different extents by the stationary phase and/or the mobile phase.
2. To allow the solvent to be forced through the column under pressure, thereby achieving a rapid separation.
3. To enable the syringe to be fitted exactly into the column – without this, it is not possible to force the liquid through the column under pressure.
4. Methanol will remove any residual organic material from the column. Water will then remove any remaining methanol.

INSTRUMENTAL METHODS OF SEPARATION AND ANALYSIS

1. **Mass spectrometry** – revise from atomic theory.

2. **Gas chromatography (GC)** – in this technique a gas is the mobile phase.

- The stationary phase is a high boiling point liquid spread on silica gel packed into a long coiled tube of small diameter.
- The tube is kept in a temperature controlled oven.
- The sample is injected into the column.
- The column is heated to vaporise the sample and it is carried through by a gas such as nitrogen or helium as these are unreactive gases.
- The different components of the mixture separate out at different rates as they are carried through the column.
- As each component leaves the column a detector records a signal and plots a chart called a gas chromatogram.
- Each component shows up as a peak.
- GC is uses to measure the level of alcohol in blood or urine and in drug test samples from athletes.

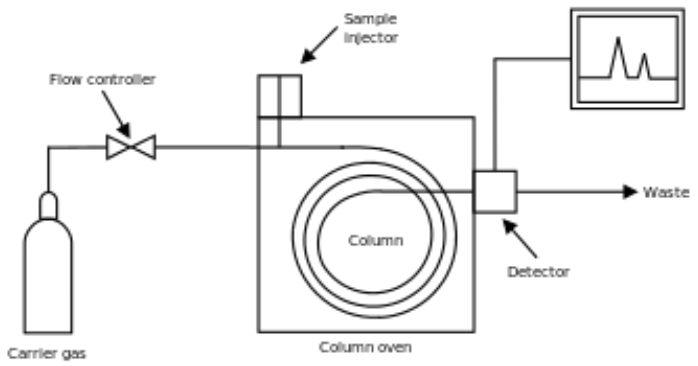

3. **High performance liquid chromatography (HPLC)** – this is used to determine non-volatile components of a mixture.

- The particles of the solid phase are very small and so pressure is used to force the mixture (in a liquid solvent) through.
- The temperature used is not as high as in GC so this prevents decomposition of substances at high temperatures.
- The column is not as long and is made of material that can withstand the high pressures used.
- It is used in food analysis – growth promoters in meat, vitamins in food.

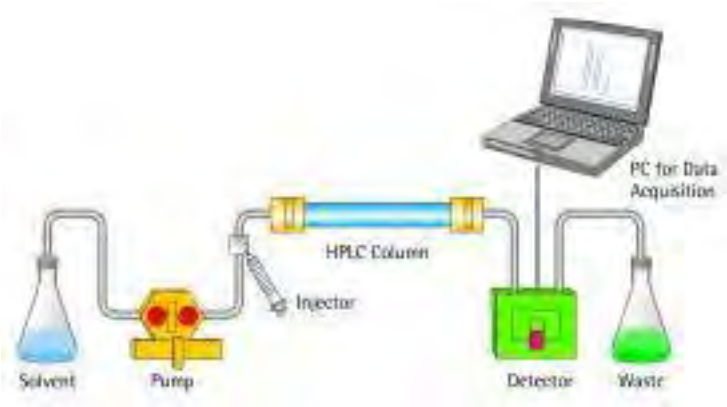

4. **Infra – red spectrometry (IR)** – infra-red radiation is invisible.

- Organic compounds absorb infra-red radiation, more specifically the bonds do. The bonds begin to vibrate.
- Different bonds absorb different amounts and so vibrate differently.
- These vibrations produce a 'finger-print' for each molecule and so the molecules can then be identified by checking against those present in a data-base.
- Infra-red spectrometry is used to identify plastics and drugs.

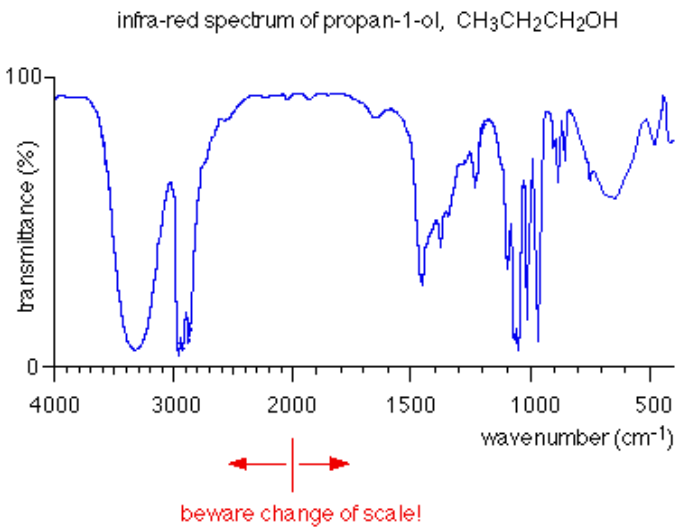

5. **Ultra-violet spectrometry (UV)** –

- When a substance absorbs ultra-violet light it may cause an electron to be promoted to a higher energy level and a spectrum is obtained.
- Maximum absorption tends to occur at a certain wavelength and this helps to identify the compound and its concentration, as absorbance is related to concentration.
- It is used in the quantitative determination of organic compounds e.g. drug metabolites and plant pigments.

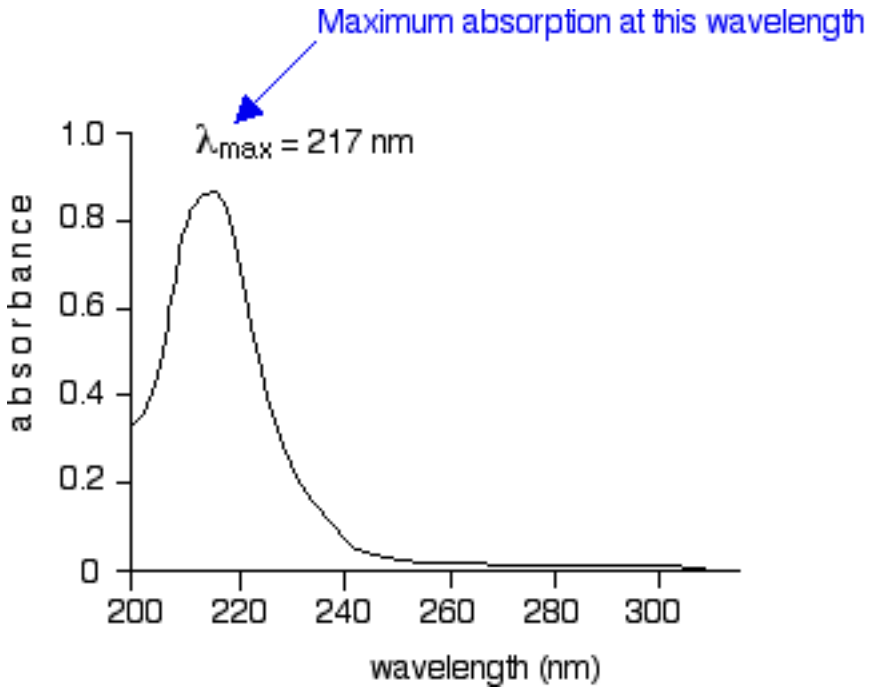

Note – these techniques are applicable to many other areas of chemistry not just organic chemistry.

EXPERIMENT - RECRYSTALLISATION OF BENZOIC ACID AND DETERMINATION OF ITS MELTING POINT.

Theory behind the experiment - this technique is used to **separate and purify** organic solids. It works on the **principle** that **more solute is soluble in a hot solvent than in a cold solvent**. The substance to be purified is dissolved in the minimum amount of hot solvent possible and then this is filtered to remove any insoluble impurities. This must be done quickly to prevent the solution from cooling. Then as the filtered solution cools, crystals appear. The crystals are dried using a desiccator or by leaving in a warm place and tested for purity by measuring their melting point.

Apparatus – beaker, Buchner funnel, vacuum pump, filter paper, melting point tubes, thermometer, Bunsen burner, clock glass.

Materials – benzoic acid, liquid paraffin.

Method –

1. About 5 g of benzoic acid was placed in a beaker.
2. This was dissolved in the **minimum** amount of hot water. **Minimum** so that the benzoic acid does not remain in solution on cooling to maximise the yield.
3. First filtration - This hot solution was filtered through a Buchner funnel (under suction, so, fast). Insoluble impurities remain on the filter paper.
4. The filtrate was allowed to cool slowly.
5. Second filtration - The excess solvent was filtered off and the crystals remain on the filter paper and were allowed to dry.

To determine the melting point of the benzoic acid crystals –

1. Some crystals were tapped into the open end of a melting point tube until there was about 0.5 cm of the crystals at the end of the tube.
2. Using a rubber band the tube was attached to a thermometer as shown below.
3. A boiling tube was half filled with liquid paraffin and the tube and thermometer were placed in the boiling tube.
4. This was placed over a Bunsen burner and heated. The liquid paraffin was stirred thoroughly throughout.
5. The temperature at which the crystals started to melt was noted and recorded.
6. The paraffin was allowed to cool about 10 $^{\circ}$C and a fresh melting point tube with crystals was put in the boiling tube.
7. The paraffin was heated again, more slowly this time and the temperature at which the crystals melted was again noted. Melting is indicated by the formation of a visible meniscus.

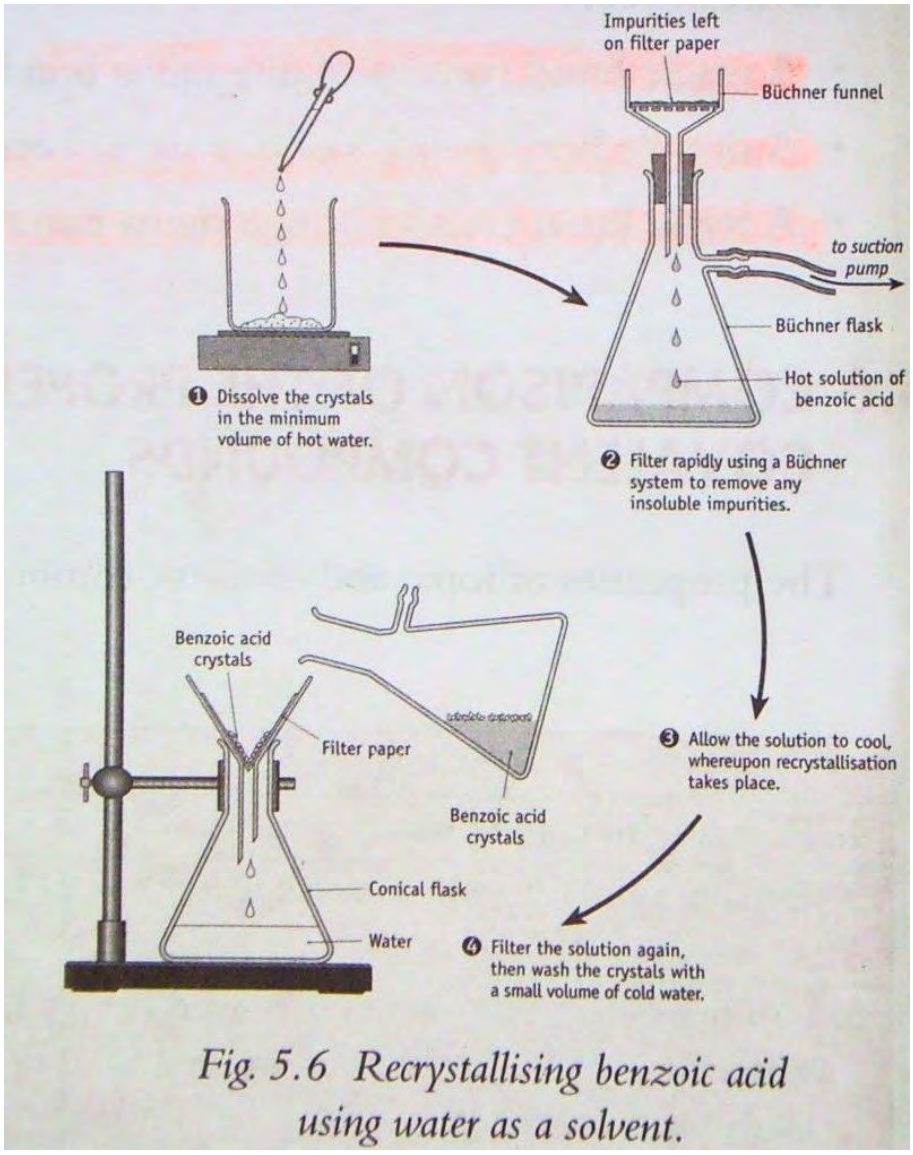

Fig. 5.6 Recrystallising benzoic acid using water as a solvent.

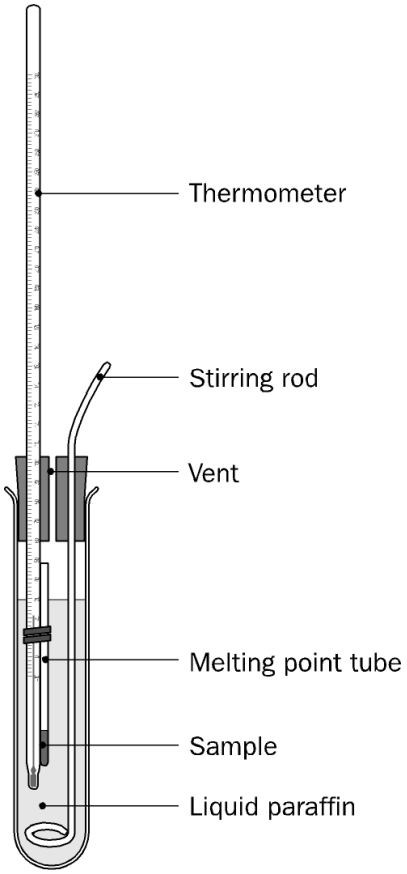

Note – if the crystals are **pure** then a **SHARP** melting point should be obtained. If the crystals are IMPURE then a melting point range will be obtained.

You may use the aluminium block instead of the above method.

CRACKING

This is a process that involves breaking up long chain hydrocarbons for which there is low demand into short chain hydrocarbons for which there is high demand.

This can be done using a catalyst or heat i.e. catalytic cracking or thermal cracking.

It is important to remember that for every bond that is broken a double bond must be formed in a product molecule.

For example if a molecule is cracked in two places then there will be three products and two of them will contain a carbon carbon double bond.

Question
Give the names and structural formulae of the 3 products of the cracking of the molecule of molecular formula $C_{10}H_{22}$.

Possible solution-
3 products so two breaks!

Methane	propene	2 methyl pent-1-ene
(1 C, 4 H)	(3 C, 6 H)	(6 C, 12 H)

Note – there is more than one possible answer to this question. As long as your total number of carbon and hydrogen atoms equals that in the molecular formula your answer is acceptable.

LEAVING CERT 2005
State the principle on which all chromatographic separation techniques are based. (10)

Describe with the aid of clearly labelled diagrams how you could carry out an experiment to separate a mixture of dyes (or indicators) using paper, thin-layer or column chromatography. (15)

LEAVING CERT 2004
(a) A sample of impure benzoic acid was recrystallised as follows: 2.5g of the impure benzoic acid was weighed out and dissolved in the minimum amount of hot water. The hot solution was filtered and the filtrate was allowed to cool and recrystallise. The recrystallised benzoic acid was isolated by filtration. After drying, 2.25g of purified acid were obtained.

(i) Why is it important to use the minimum amount of hot water in the procedure? (5)
(ii) Indicate clearly the stage of the recrystallisation procedure at which insoluble impurities were removed and how their removal was achieved. Indicate also the

stage at which soluble impurities were removed and how their removal was achieved. (12)

(iii) How could you have ensured that the recrystallisation was complete? (3)

(iv) How could the crystals have been dried? (3)

(v) What was the percentage yield of the purified benzoic acid? (3)

(b) Melting points of samples of the impure and recrystallised benzoic acid were taken and compared.

(i) Describe with the aid of a labelled diagram how you would have measured the melting point of one of these samples. (15)

(ii) Give two ways in which you would expect the melting point of the impure benzoic acid to differ from that of the purified acid. (6)

(iii) State one use of benzoic acid and its salts. (3)

LEAVING CERT 2009

Straight chain molecules of $C_{13}H_{28}$ occur in the kerosene fraction. Upon cracking a molecule of $C_{13}H_{28}$, a C_2H_4 molecule, a C_4H_8 molecule and an unbranched alkane molecule are obtained.

Identify this unbranched alkane molecule and state its octane number.

Draw structures for three of the isomers of C_4H_8. (15)

LEAVING CERT 2010

A chemist synthesised benzoic acid in the laboratory and purified it by recrystallisation. The melting point of the product was measured before and after recrytallisation.

(i) Describe with the aid of a labelled diagram how the melting point of either the crude product or the recrystallised product could have been measured. (12)

(ii) Give two ways the chemist could have concluded from the melting point measurements that the recrytallised product was purer than the material first prepared. (6)

(iii) Name the instrumental technique that could have been used to confirm the identity of the product based on its absorbtion of a unique set of low energy electromagnetic radiations. (3)

(iv) Give one important use of benzoic acid or its salts. (4)

LEAVING CERT 2012

Organic solids are frequently purified by recrystallization.

An impure sample of benzoic acid contained small quantities of the two solids: salt (**NaCl**, white and soluble) and charcoal (**C**, black and insoluble).

The diagrams illustrate the five main stages in the recrystallization of the impure benzoic acid from water.

(*a*) What precaution should have been taken at Stage 1 to ensure the maximum yield of pure benzoic acid crystals at Stage 5? (5)
(*b*) What solid was collected (*i*) at **A**, (*ii*) at **B**? (6)
(*c*) Explain what should have been done at Stage 3 to ensure the maximum yield at Stage 5. (6)
(*d*) Comparing the solubilities of benzoic acid and salt (**NaCl**) in hot and in cold water, explain how benzoic acid is separated from the salt in this procedure. (6)
(*e*) Describe how the benzoic acid was dried at Stage 5. (3)
(*f*) Describe with the aid of a labelled diagram how the melting points of the impure benzoic acid and of the recrystallized, dried benzoic acid could be measured.
How would you have expected the melting point values of the two samples to differ? (18)
(*g*) Give **one** common use of benzoic acid or of its salts. (6)

LEAVING CERT 2016

The two test-tubes on the left in the diagram contain pure samples of **A** and **B**, different gaseous hydrocarbons, one of which is unsaturated.

The pure liquids **C**, **D** and **E** in the other test-tubes are samples of ethanal, ethanoic acid and eugenol, but not necessarily in that order.

The crystalline solids **F** and **G** are two different benzoic acid samples.

(*a*) Describe how to chemically test sample **A** or **B** for unsaturation. (9)

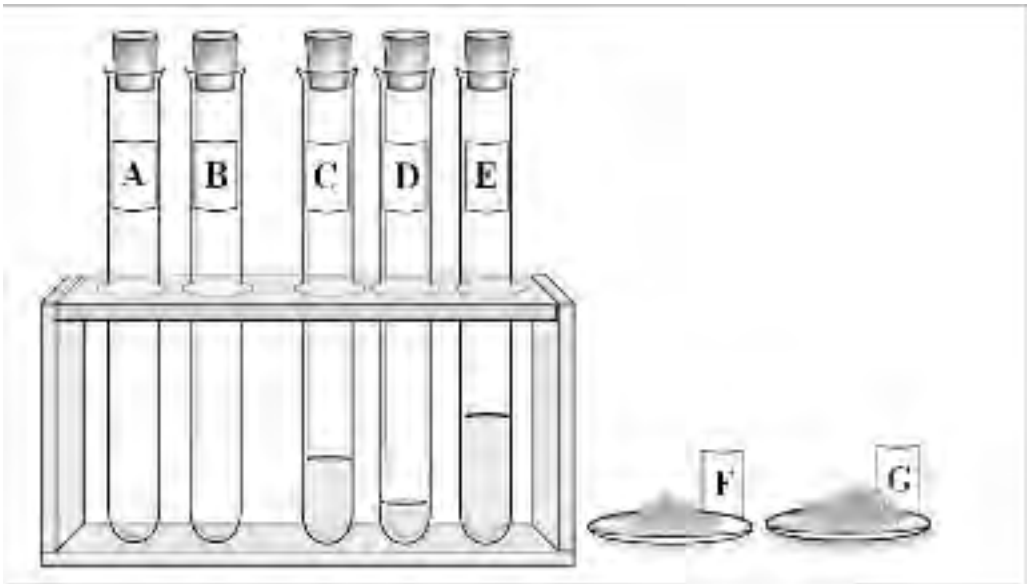

(*b*) (*i*)

At room temperature (20 C) was observed that **D** evaporated more quickly than either **C** or **E**.

Based on this observation deduce the identity of liquid **D**. Describe a chemical test to confirm that **D** can be very easily oxidised. (12)

(*ii*) Some water was added to liquids **C** and **E** and the test-tubes were stoppered and shaken vigorously. After the test-tubes were allowed to stand, a white emulsion was observed in the test-tube containing **C** and a colourless solution in the test-tube containing **E**. Identify **C** and **E**. A small volume of cyclohexane was then added to the test-tube containing **C**. The test-tube was stoppered and again shaken vigorously and the stopper loosened. What was observed after the test-tube was again allowed to stand? (9)

. (*iii*) A piece of freshly-sanded magnesium ribbon was then added to the test-tube containing **E**. Write a balanced equation for the reaction that took place. (6)

(*c*) (*i*) (*ii*) The melting-point range of **F** is lower and broader than that of **G**.

Describe with the aid of a labelled diagram a method used to measure the melting point of a sample of benzoic acid.

Which is the purer benzoic acid sample?

(*iii*) Name a laboratory technique that could be used to purify impure benzoic acid. (14)

END OF ORGANIC CHEMISTRY!!!

ATOMIC RADIUS

ATOMIC RADIUS (covalent radius)

Defn - The atomic radius is obtained by getting half the distance between the centres of singly bonded atoms of the same element.

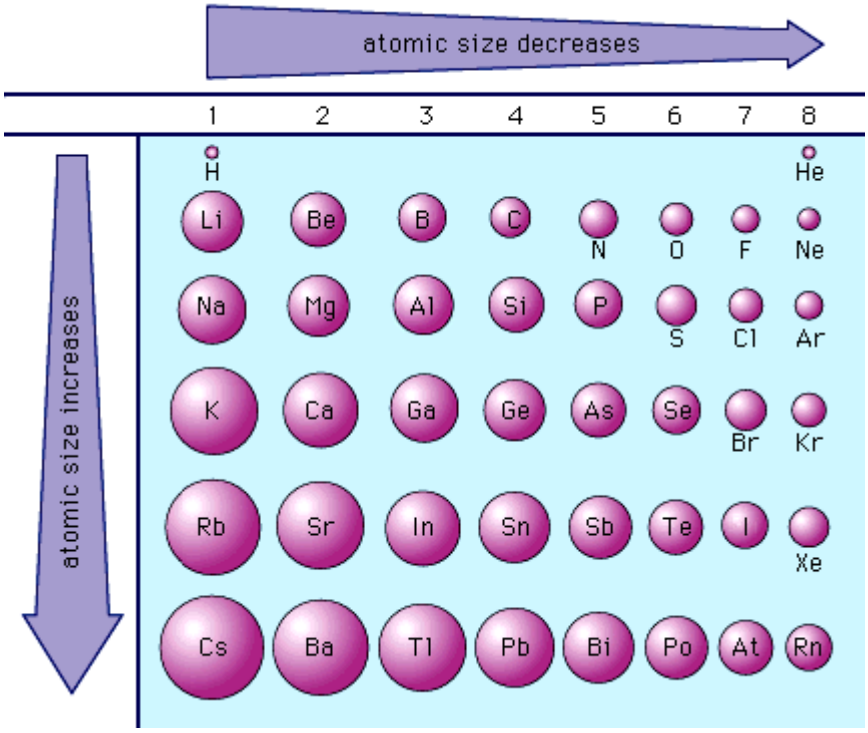

Trends in the periodic table

There is a **decrease** in the atomic radius on going across a period due to

1. An increase in the nuclear charge (number of protons)
2. No change in the number of shells hence the screening effect of completed shells remains the same.

The outer electrons are therefore held more closely to the nucleus as the positive nucleus 'pulls' the electrons in towards itself which leads to a smaller radius.

There is an **increase** in the atomic radius on going down a group due to

1. An increase in the number of shells
2. The screening effect of electrons in the full inner shells blocks out some of the 'pull' that the nucleus has on the outer electrons.

Thus the outer electrons are further away from the nucleus, so are less closely held which leads to a larger radius.

Practice exercise – arrange the following atoms in order of increasing atomic radii: Na, Be, Mg.

ELECTRONEGATIVITY

ELECTRONEGATIVITY
Defn – the relative power of attraction an atom of an element has for the shared pair of electrons in a covalent bond.

According to this concept, each kind of atom has a certain **attraction for the electrons** involved in a chemical bond. This 'electron-attracting' power of each atom can be listed numerically on an electronegativity scale. Fluorine has the greatest attraction for electrons in bond-forming situations as it has (a) the strongest positive nucleus and (b) the smallest radius in its period and hence is given the highest value. All other atoms are given values less than that of fluorine as fluorine has the smallest radius of all the atoms. (See log tables.)

When atoms react with each other, they 'compete' for the electrons in the bond. The atom with the higher electronegativity value will always 'pull' the electrons away from the atom that has the lower electronegativity value. The degree of 'movement' of these electrons toward the more electronegative atom is dependent on the difference in electronegativities between the atoms involved. The bigger the difference in the electronegativity of the elements forming a bond, the more polar the bond.

If the electronegativity difference between two atoms is greater than or equal to 1.7 the bond is ionic.
If the electronegativity difference between two atoms is less than 1.7 the bond is polar covalent. (Relative variations occur here from slightly to very polar covalent).
If the electronegativity difference between two atoms is equal to 0 then the bond is pure covalent.

USING ELECTRONEGATIVITY DIFFERENCES TO PREDICT BONDING

Example 1 – HCl
Electronegative value of Cl = 3.0
Electronegative value of H = 2.1
Electronegative difference = 0.9 hence the bond is polar covalent

Example 2 – Cl2
Electronegative value of Cl = 3.0
Electronegative value of Cl = 3.0
Electronegative difference = 0 hence the bond is pure covalent

Example 3 – H2O
Electronegative value of O = 3.5
Electronegative value of H = 2.1
Electronegative difference = 1.4 hence the bond is polar covalent
Note – there are two H-O bonds in water, we find one of them, the other is the same.

Example 4 - NaCl
Electronegative value of Cl = 3.0
Electronegative value of Na = 0.9
Electronegative difference = 2.1 hence the bond is ionic

TRENDS IN THE PERIODIC TABLE IN ELECTRONEGATIVITY VALUES

Across a period

Electronegativity values generally **increase on going across** a period due to:

- an increase in nuclear charge
- leading to a decrease in atomic radius

With a small radius and a relatively large nuclear charge the atom has great attraction for electrons.

Down a group

Electronegativity values generally **decrease on going down a group** due to:

- The addition of extra shells making the atomic radius larger
- The screening effect of inner completed shells on outer electrons

With a large radius the nucleus finds it more difficult to attract electrons.

Metals generally have low electronegativity values (as they are electropositive), while non-metals have relatively high electronegativity values.

FORMULAE (-ide endings)

In writing these formulae, the atom with the lower electronegativity value usually gets written first.

Examples – NaCl, MgO, NaH, OF_2, Cl_2O.

FORMATION OF IONS

CATIONS

When an atom loses electrons it becomes a positive ion (cation). The number of protons (+) remains the same but the number of electrons (-) decreases, hence we get an overall positive charge.

Examples:

Na atom 11 protons + 11 electrons = neutral
Na^{+} ion 11 protons + 10 electrons = +1 charge

Ca atom 20 protons + 20 electrons = neutral
Ca^{2+} ion 20 protons + 18 electrons = + 2 charge

ANIONS

When an atom gains electrons it becomes a negative ion (anion). The number of protons (+) remains the same but the number of electrons (-) increases, hence we get an overall negative charge.

Examples:

F atom 9 protons + 9 electrons = neutral
F^{-} ion 9 protons + 10 electrons = - 1 charge

S atom 16 protons + 16 electrons = neutral
S^{2-} ion 16 protons + 18 electrons = - 2 charge

Write in the correct symbol, valency and charge for the following:
Magnesium ion - Mg^{2+}
Potassium ion _____
Iron _____
Oxide ion _____
Aluminium ion _____
Fluorine _____
Nitride ion_____
Lithium ion _____

Note1 – simple anions names end in 'ide' and come from the right hand side of the periodic table. For example: bromide ion is Br^{-}, sulfide ion is S^{2-} and phosphide ion is P^{3-}.

Extremely important note – in the following pages it is vital that you understand the difference between the prefixes 'intra' and 'inter'.
Intramolecular means 'within one molecule'
Intermolecular means 'between two or more molecules'
Getting these mixed up means the loss of all marks!!!!

IONIC BONDING

IONIC BOND
Defn – an ionic bond is formed due to the electrostatic attraction between oppositely charged ions caused by the complete transfer of electrons from one atom to another.

This type of bonding usually occurs between a metal (left) and a non-metal (right).

Example 1 (using dot and cross diagrams)
Question – show the formation of the ionic bond in sodium chloride, using suitable diagrams.

$$Na + Cl \longrightarrow [\ Na\ ]^{+} + [\ Cl\ ]^{-}$$

Example 2
Question – show the formation of the ionic bond in calcium fluoride, using suitable diagrams.

$$Ca + F + F \longrightarrow [\ Ca\ ]^{2+} + [\ F\ ]^{-} + [\ F\ ]^{-}$$

Note - it is important to show the atoms first and the ions formed second.

CRYSTALLINE STRUCTURE OF IONIC COMPOUNDS

Ionic bonding does not result in the formation of individual molecules

It must be remembered that each positive ion (cation) exerts its positive charge in all directions around itself and so attracts many of the negative ions (anions) to itself. Similarly, each negative ion exerts its negative charge in all directions around itself and so attracts many of the positive ions to itself**. No molecules are present** – no ion belongs specifically to any other ion but to all ions surrounding it!
As a result ionic compounds are made up of an orderly arrangement of oppositely charged ions held together by electrostatic forces. This arrangement give rise to a crystalline structure called a **lattice.**

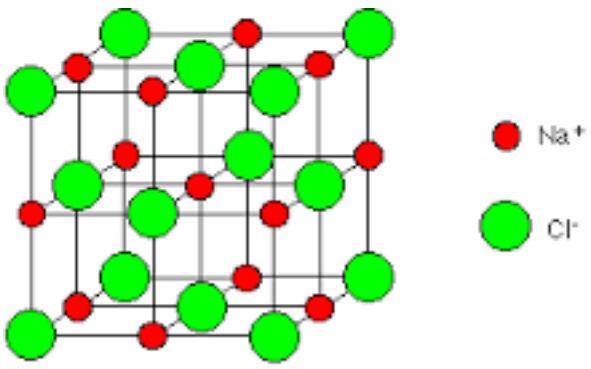

COMMONLY ASKED QUESTIONS AND SUGGESTED ANSWERS

Q. Why are ionic compounds crystalline?

A. Because they are made up of an orderly arrangement of oppositely charged ions which give rise to a lattice structure.

Q. Why are ionic compounds solid?

A. There are extremely strong attractions between the oppositely charged ions which hold the ions tightly together giving a solid structure.

Q. Why do ionic compounds have high boiling points/ melting points?

A. The extremely strong attractions between the oppositely charged ions require large amounts of energy to break, hence ionic compounds have high b.p. and m.p.

PROPERTIES OF IONIC COMPOUNDS

1. Ionic compounds are usually **solid crystalline** compounds due to individual ions attracting other ions (extremely strong forces of attraction) .
2. Ionic compounds **conduct electricity** when either in the **molten** or **dissolved** state as the ions are free to move.
3. Ionic compounds dissolve or are **soluble in polar solvents**, such as H_2O, as the attraction between the ions in the compound and polar water are strong enough to pull the crystalline lattice apart.
4. Ionic compounds have **high melting and boiling points** due to a lot of energy being needed to break the extremely strong forces of attraction between the ions.

IONIC MATERIALS IN EVERYDAY LIFE

1. Washing soda crystals, Na_2CO_3, are used to soften hard water e.g. Calgon tablets
2. Aluminium sulphate, $Al_2(SO_4)_3$, is used as a flocculating agent in the preparation of water for drinking. It causes small suspended particles to stick together so that they can be filtered off more easily. (NOTE : aluminium is associated with Alzheimer's disease)
3. Salt tablets are used to replace salt lost by sweating.

LEAVING CERT 2015
(*a*) Define *electronegativity*. (6)

Why is there an increase in electronegativity value moving from gallium to germanium in the periodic table? (6)

Mendeleev predicted the properties of the elements gallium and germanium years before either of them was discovered. Explain the basis for his predictions. (6)

Write the molecular formula for the simplest compound formed between germanium(IV) and hydrogen.

Would you expect this compound to be water soluble? Justify your answer. (7)

LEAVING CERT 2008
Use dot and cross diagrams to show the formation of bonds in magnesium chloride. (6)
Explain the term *intermolecular forces*. (6)

Test yourself –

1. What can you say about the charges in the ions formed by:
   (a) group 1 metals
   (b) group 2 metals
   (c) aluminium in group 3
   (d) nitrogen in group 5
   (e) oxygen and sulfur in group 6
   (f) halogens in group 7

2. What are the formulae of these ionic compounds?
   (a) ammonium chloride
   (b) sodium oxide
   (c) potassium carbonate
   (d) calcium nitrate
   (e) calcium nitride

3. Use dot and cross diagrams to show the ionic bonding in the following:
   (a) magnesium oxide
   (b) sodium sulfide

4. Explain why aluminium oxide conducts electricity when molten but not when solid?

RADIOACTIVITY

A French scientist, **Henri** Becquerel **(1852-1908),** noticed while experimenting with uranium that when he left some uranium on a photographic plate covered with black paper, the area of the photographic plate near the uranium became darker despite the fact that it had not been exposed to any sunlight. The uranium was giving off some type of radiation to cause this blackening to happen. Two of his colleagues, Marie and Pierre **Curie,** continued with this idea and discovered two new elements, polonium (Po) and radium (Ra) from impure uranium salt called pitchblende. The radiation was noticed to carry an electrical charge.

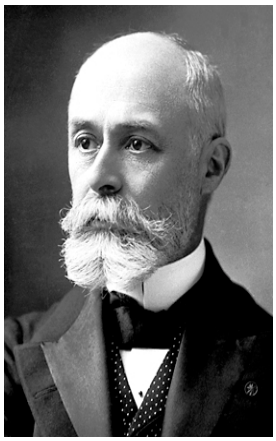
Henri Becquerel

Marie Curie

Pierre Curie

A Geiger-Muller tube is an instrument that can detect radioactivity. The SI units of radioactivity is the Becquerel (Bq).

RADIOACTIVITY

Defn – is the spontaneous disintegration of the nucleus with the emission of α,β or γ radiation.

Alpha particles

CHARGE - Positive particles
STRUCTURE - Consist of two protons and two neutrons (hence same as helium nucleus)
PENETRABILITY **- Not very penetrating**, can be stopped by a sheet of paper or 5 cm of air. Strongly ionising and very dangerous if they enter the body through the nose or mouth as can cause mutations in cells.

EXAMPLE OF ALPHA EMMITTER - Americium-241 which is used in smoke detectors. Its half life is over 400 hundred years.

- Mass of 4 a.m.u.
- Symbolised by $^{4}_{2}He$

If an alpha particle is lost and you want to find the new element

1. Subtract 2 from the atomic number (bottom number).
2. Look up new atomic number in the periodic table to find symbol for new element.
3. Subtract 4 from mass number (top number).

Example:

$$^{226}_{88}Ra \longrightarrow {}^{222}_{86}Rn + {}^{4}_{2}He$$

Try the following:

1. Fill in the missing part $_{84}^{214}Po \rightarrow ..... + _{2}^{4}He$

2. Write a balanced nuclear equation to show that lead – 202 is an alpha emitter.

Beta particles

CHARGE - Negatively charged particles.
STRUCTURE - Are high-speed electrons.
PENETRABILITY - Are more penetrating than alpha particles (**moderately penetrating**!), as they are lighter. They can penetrate up to 5mm of aluminium metal and 500 cm of air.
EXAMPLE OF A BETA EMMITTER - carbon-14, which is used to find the age of objects in 'carbon dating'.

- Mass of 1/1840 a.m.u.
- Formed when there are too many neutrons in the nucleus to be stable.
- A neutron changes into a proton and an electron.
- The electron is ejected from the nucleus, as it would require too much energy to stay in the nucleus. The ejected electron is the beta particle.
- Symbolised by $_{-1}^{0}e$.
- Beta particles are used to kill cancerous skin cells

If a beta particle is lost and you want to find the new element

1. Add 1 to the atomic number (bottom number).
2. Look up periodic table to find the symbol for the new element.
3. Leave the mass number the same (top number).

Example:

$$^{212}_{82}Pb \longrightarrow {}^{212}_{83}Bi + {}_{-1}^{0}e$$

Try the following:

1. Fill in the missing parts

$$_{11}^{24}Na \rightarrow .....+_{-1}^{0}e$$

$$_{83}^{214}Bi \rightarrow .....+_{-1}^{0}e$$

$$_{79}^{198}Au \rightarrow .....+_{-1}^{0}e$$

2. Write a balanced nuclear equation to show that phosphorus-32 is a beta emitter.

Gamma rays

CHARGE - Neutrally charged.
STRUCTURE - They are high-energy electro-magnetic radiation.
EXAMPLE - An example of a gamma emitter is cobalt-60.
PENETRABILITY - They are **extremely penetrating**, can only be stopped by several cm of lead (very dense metal).

- The loss of gamma radiation does <u>not give rise to a new element</u>, as it is simply the loss of energy from the nucleus.
- Are used to treat cancer as they kill the cancerous cells, but can also cause cancer as they can change the structure of our cells.

	ALPHA	**BETA**	**GAMMA**
Charge	positive	negative	neutral
Structure	2protons +2neutrons	electron	Electromagnetic radiation
Penetrability	Not very penetrating	Moderately penetrating	Extremely penetrating
Example	Am-241	C-14	Co-60

<u>DIFFERENCE BETWEEN NUCLEAR REACTIONS AND CHEMICAL REACTIONS</u>
Defn – a nuclear reaction involves a change in the nucleus of an atom and a new element is <u>usually</u> formed as a result.
Defn – a chemical reaction involves electrons being shared or transferred from one atom to another– the nucleus of the atom remains the same.

<u>HALF-LIFE</u>
Defn – this is the time taken / for half the NUCLEI / in a given sized sample to decay.

NOTE – it is very important that you say 'nuclei' not nucleus….

As we have said the emission of radioactivity by an atom is spontaneous and unpredictable. It also appears to be unaffected by external conditions like chemical reactions, pressure and temperature. However there is one factor that does appear to govern the overall rate of decay – the number of nuclei left undecayed.
Experiments show that the time taken for half of the atoms in a sample of a radioisotope to decay is constant for that particular isotope. For example, the half-life of radon-222 is 3.2 days. If we start with 1 g of radon-222 then after 3.2 days there will be 0.5g left. The rest will have decayed to polonium-218. After another 3.2 days there will be 0.25g left and so on. Can you now identify the type of particle radon-222 has emitted from the information given?
The half-life of elements can vary considerably. Iodine –131 has a half-life of 8 days, whereas uranium-238 has a half-life of 4.5 billion years.

USES OF RADIOISOTOPES – this is an isotope of an element that undergoes radioactive decay.

1. **Nuclear power** – heat generated in nuclear power stations by nuclear reactions is used to produce electricity.
2. **Cancer treatment** – gamma rays of cobalt-60 are used to kill cancerous cells inside the body. Beta rays are used to treat skin cancers, as they are less penetrating.
3. **Sterilisation** – radiation is used to sterilise medical equipment. It is also used to kill bacteria to give food a longer shelf life.
4. **Archaeological uses** – the carbon-14 isotope is radioactive and is present as a very small amount of carbon dioxide in the air that is used by plants in photosynthesis and ends up in animals when they eat plants. The carbon -12 to carbon – 14 ratio remains constant when the organism is alive. When a plant/animal dies the carbon-14 already in the plant/animal starts to decay very slowly and therefore the ratio of carbon-14 to carbon-12 changes in the organism. By **measuring the RATIO of carbon-12 to carbon-14 and knowing the half-life of carbon-14** the time of death of the organism can be calculated.

Nuclear fission – is the splitting of a nucleus into two roughly equal fragments. Uranium splits when bombarded with neutrons. Very large quantities of energy are given out. The fission of uranium produces more neutrons that can cause subsequent fission reactions, leading to a chain reaction.

Nuclear fusion – is the joining of two smaller nuclei to form a larger one. Energy is given out.

WORKSHEET

LEAVING CERT 2016

(*i*) What are isotopes? What is a *radioisotope*? Define the half-life of a radioisotope. (13)

(*ii*) John Joly was an Irish scientist who in 1914 pioneered the treatment of cancer using a radium compound containing radium–226.

Complete the following nuclear equation to show the alpha decay of radium–226.

$^{226}_{88}Ra \rightarrow$ _____ + _____ (6)

(*iii*) Radium–223 undergoes alpha decay and is also used in radiotherapy. Starting with a sample containing 1.0×10^{-4} moles of radium–223, how many of these atoms remain when 87.5% of the sample has decayed? (6)

LEAVING CERT 2015

What change takes place in the nucleus of an atom when beta decay occurs?

LEAVING CERT 2014

Write a balanced a balanced nuclear equation for the beta-decay of the $^{223}_{87}$Fr nucleus. (6)

LEAVING CERT 2013

Caesium–137 is a radioactive isotope of the alkali metal caesium. Caesium–137 was released into the atmosphere when Japanese nuclear reactors were damaged by a tsunami in 2011.
Caesium–137 decays by beta-particle emission with a half-life of 30 days.
(*i*) Define *radioactivity*. (6)
(*ii*) Give **two** differences between chemical reactions and nuclear reactions. (6)
(*iii*) Give **two** properties of beta-particles. (6)
(*iv*) A certain mass of caesium–137 leaked on a particular day. What fraction of this mass remained as caesium–137 after 90 days? (7)

LEAVING CERT 2011

What are *isotopes*? (5)
Define (*i*) *radioactivity*, (*ii*) *radioisotope*. (8)
Carbon–14 decays by beta particle emission. Write a balanced equation to describe beta-decay of the carbon–14 nucleus. (6)
The world's oldest shoe, found in a cave in Armenia, is pictured on the right.
In June 2010, having been radiocarbon dated, it was reported to be 5500 years old.
Explain why the carbon–12 to carbon–14 isotope ratio in the shoe leather changed over the 5500 years since the shoe was made. (6)

LEAVING CERT 2010

(*b*) Define (*i*) *radioactivity*, (*ii*) the *half-life* of a radioactive isotope. (10)
Americium–241 is a radioactive isotope used in domestic smoke detectors. Americium–241 has a half-life of 432 years and decays by emitting alpha particles to produce neptunium.

Determine the value of *A* and the value of *Z* in the following nuclear equation for the alpha decay of an americium–241 nucleus. (6)

$$^{241}_{95}Am \rightarrow ^{A}_{Z}Np + ^{4}_{2}He + energy$$

Alpha particles are hazardous to human health. State one risk associated with exposure to alpha radiation. (3)
Explain why the occupants of a house fitted with smoke detectors containing americium–241 are not at risk from alpha radiation emitted by these devices. (3)
Householders are advised to replace the batteries in smoke detectors regularly. Explain whether or not the americium–241 needs to be replaced regularly also. (3)

LEAVING CERT 2009
What change occurs in the nucleus of an atom when it undergoes beta emission?(6)

LEAVING CERT 2008
Give two properties of alpha particles. (6)

LEAVING CERT 2007
In November 2006 former soviet agent, Alexander Litvinenko, died in London. The cause of his death was identified as radiation poisoning by polonium-210.
Polonium-210 decays emitting an alpha particle. Copy and complete the equation for the alpha-decay of polonium-210, filling in the values of x (atomic number), y (mass number) and Z (elemental symbol). (6)

$$^{210}_{84}Po \rightarrow ^{y}_{x}Z \quad + \quad ^{4}_{2}He$$

LEAVING CERT 2006 Q4
Give two differences between a nuclear reaction and a chemical reaction. (6)

LEAVING CERT 2004 Q11(a)
Define radioactivity.(6)
(i) State two properties of beta particles. (6)
(ii) Write an equation for the nuclear reaction involved in the beta decay of ^{14}C (carbon-14). (6)
(iii) Explain how the carbon-14 isotope allows certain archaeological discoveries to be dated.(7)

LEAVING CERT 2003 Q4 (f)
List the following three types of radiation in order of <u>increasing</u> penetrating power
Alpha beta gamma (6)

LEAVING CERT 2002 Q11 (b)
What are alpha particles? (7)

Describe an experiment carried out by Rutherford and his co-workers that led to the discovery of the nucleus. Explain how Rutherford interpreted the results of this experiment to conclude that the atom has a nucleus. (18)